FIRST ANGLE PROJECTION

(ALL DIMENSIONS ARE IN mm)

DRG. NO.1 951 38 00047

THE INFORMATION ON THIS DOCUMENT IS THE PROPERTY OF BHARAT HEAVY ELECTRICALS LIMITED.
IT MUST NOT BE USED DIRECTLY OR INDIRECTLY IN ANY WAY DETRIMENTAL TO THE INTEREST OF THE COMPANY.

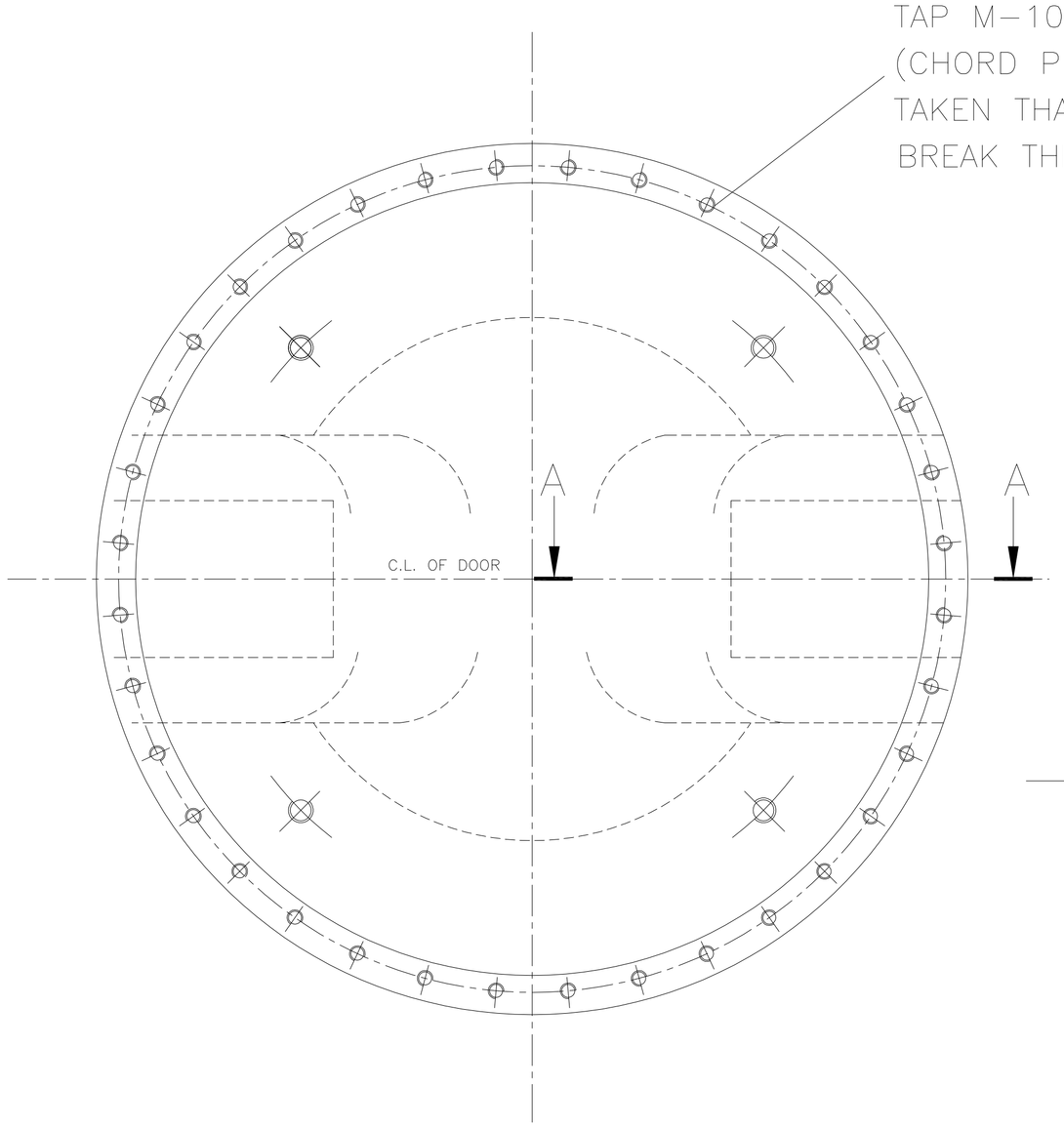

SIDE VIEW

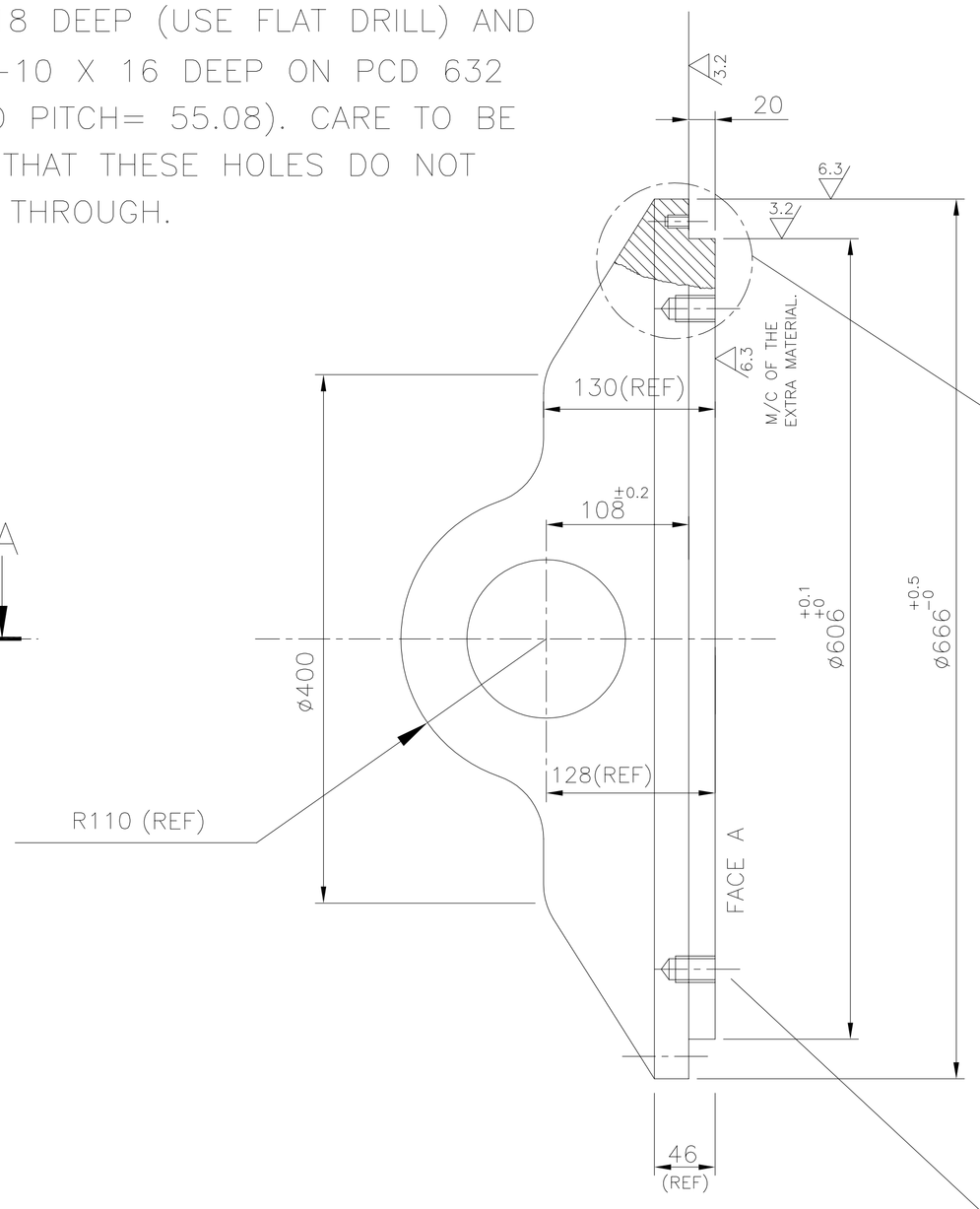

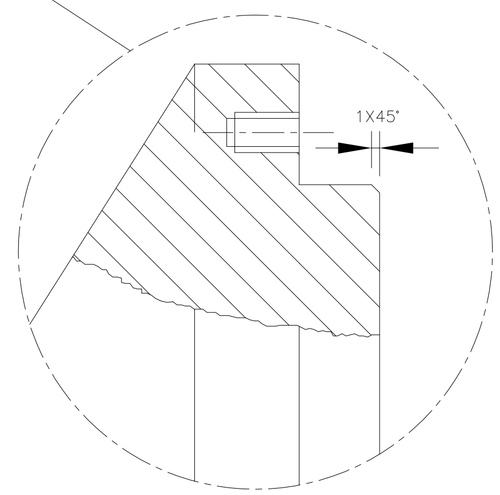

4 HOLES EQUISPACED OFF CENTRES AS SHOWN IN SIDE VIEW,DRILL 35 DEEP AND TAP M16 X 30 DEEP OF PCD 500 FOR LIFTING PURPOSE.

TECHNICAL REQUIREMENTS

1. PERMISSIBLE VIBRATION FOR UNTOLRANCED DIMENSION TO BE AS PER DRG. NO.3-200-00-49014.
2. FOR "ø700 B.F. VALVE DOOR CASTING" REFER DRG. NO. 1-951-38-00046.
3. FOR PAINTING REQUIREMENTS SEE ASSY. DRG.
4. NON-COAXIALITY OF DIAMETERS ø120 +0.04 +0 OF BOTH TRUNNION BLOCKS NOT TO BE MORE THAN 0.05 mm.
5. NON PERPENDICULARITY OF TRUNNION AXIS W.R. TO AXIS OF ø666 +0.5 +0 NOT TO BE MORE THAN 0.2 mm.

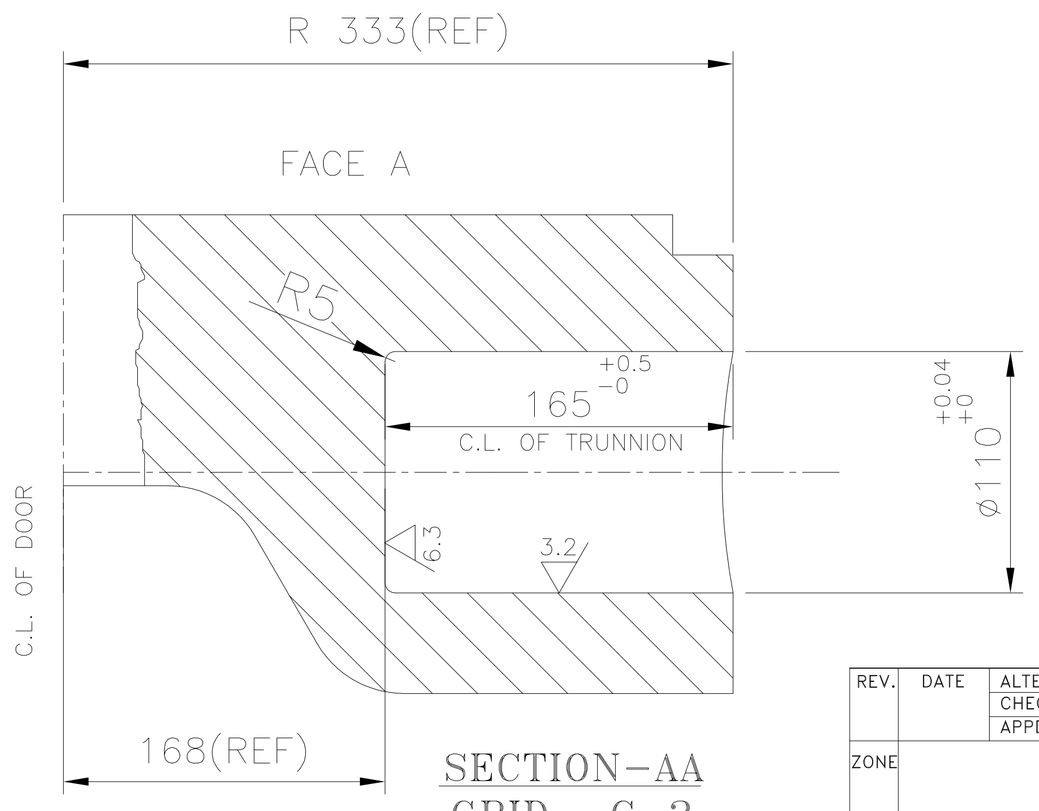

SECTION-AA
GRID- C-2

VAR.OO	REMARKS	VAR NO.	ITEM NO.	DESCRIPTION	STD.	DRAWING NO.	IT.NO.	MATL. CODE	A C	UNIT	UNIT WT.	GS	ZONE
							VAR.	MATL. SPCN.			QTY.		
28 → CARD TYPE-3				28 → CARD TYPE-1			28 → CARD TYPE-2						

DRAWING REVIEW			
DEPT.	NAME	SIGN.	DATE

ADDITIONAL INFORMATION

STATUS OF DRAWING

DISTRIBUTION OF PRINTS

PSE - 2 TGX - 1
STM - 5

REV.	DATE	ALTERED / CHECKED / APPD.	REV.	DATE	ALTERED / CHECKED / APPD.	REV.	DATE	ALTERED / CHECKED / APPD.
ZONE			ZONE			ZONE		

TYPE OF PRODUCT OR NAME OF CUSTOMER/PROJECT B.F. VALVE STANDARD

BHARAT HEAVY ELECTRICALS LTD. BHOPAL

	NAME	SIGN	DATE
DRN	H.K.LAVVANSHI	लवंशी	25.10.08
CKD	P.M.S.BISHT	प्रेममोहन	25.10.08
APPD	V.K.JAIN	वि जैन	25.10.08

NO. OF VAR.

DEPT.	UNTOL. DIMS. GR.	SCALE	WEIGHT(K.G.)	REF.TO ASSY.DRG.	ITEM NO.	NO.OF ITEM
P.S.E. CODE 412		1:5	320	-	-	

TITLE
ø 700 B.F. VALVE DOOR (M/C ING)
(FOR SEA WATER)

DRAWING NO. 1 951 38 00047 REV. 00

SHT. NO. NO. OF SHT.

REF. DRG. NO. | SIGN. & DATE | INVENTORY NO.

A1 SIZE